CC2650 RF

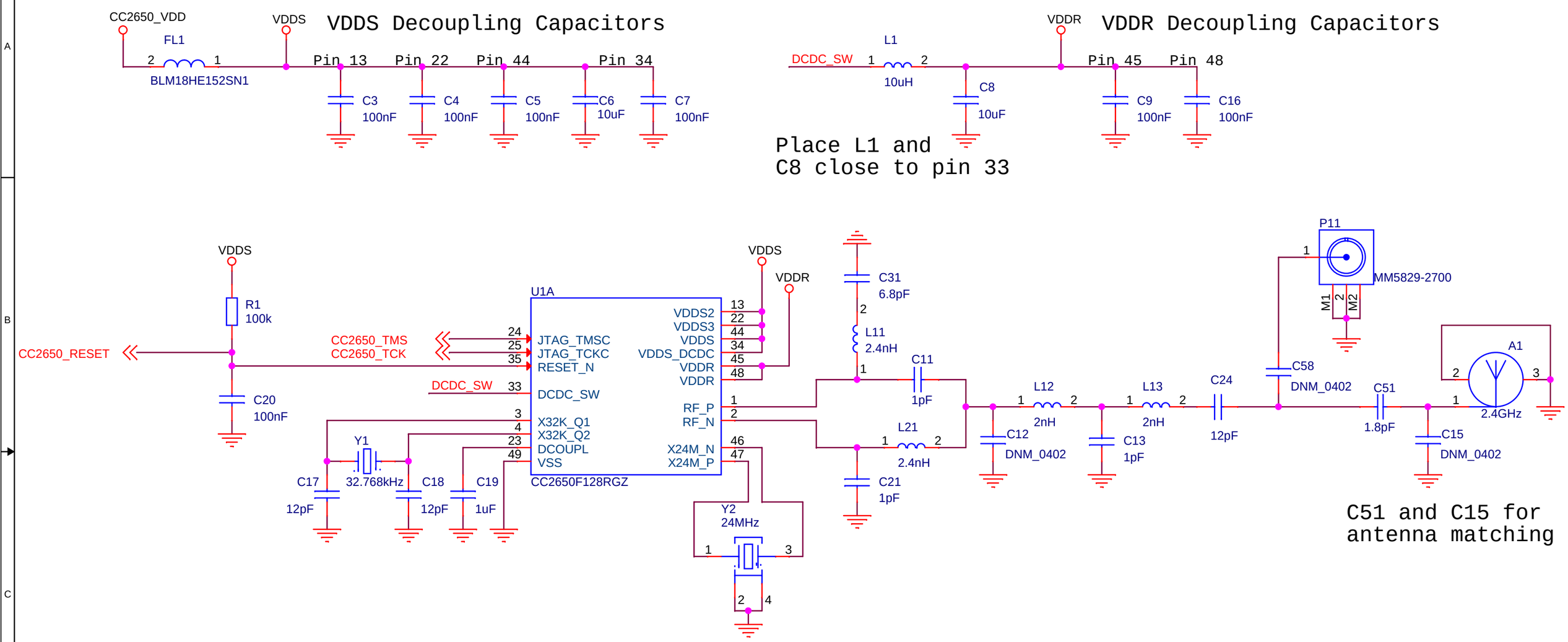

CC2650 IO block
placed on page 2.

Title: LAUNCHXL-CC2650	Texas Instruments
Drawn: FGK, KHT	
Checked: NN	
Size: A4 Rev: 1.3.0 Sheet: 1 of 5	
Date: Monday, June 06, 2016	

BoosterPack Headers and Peripherals

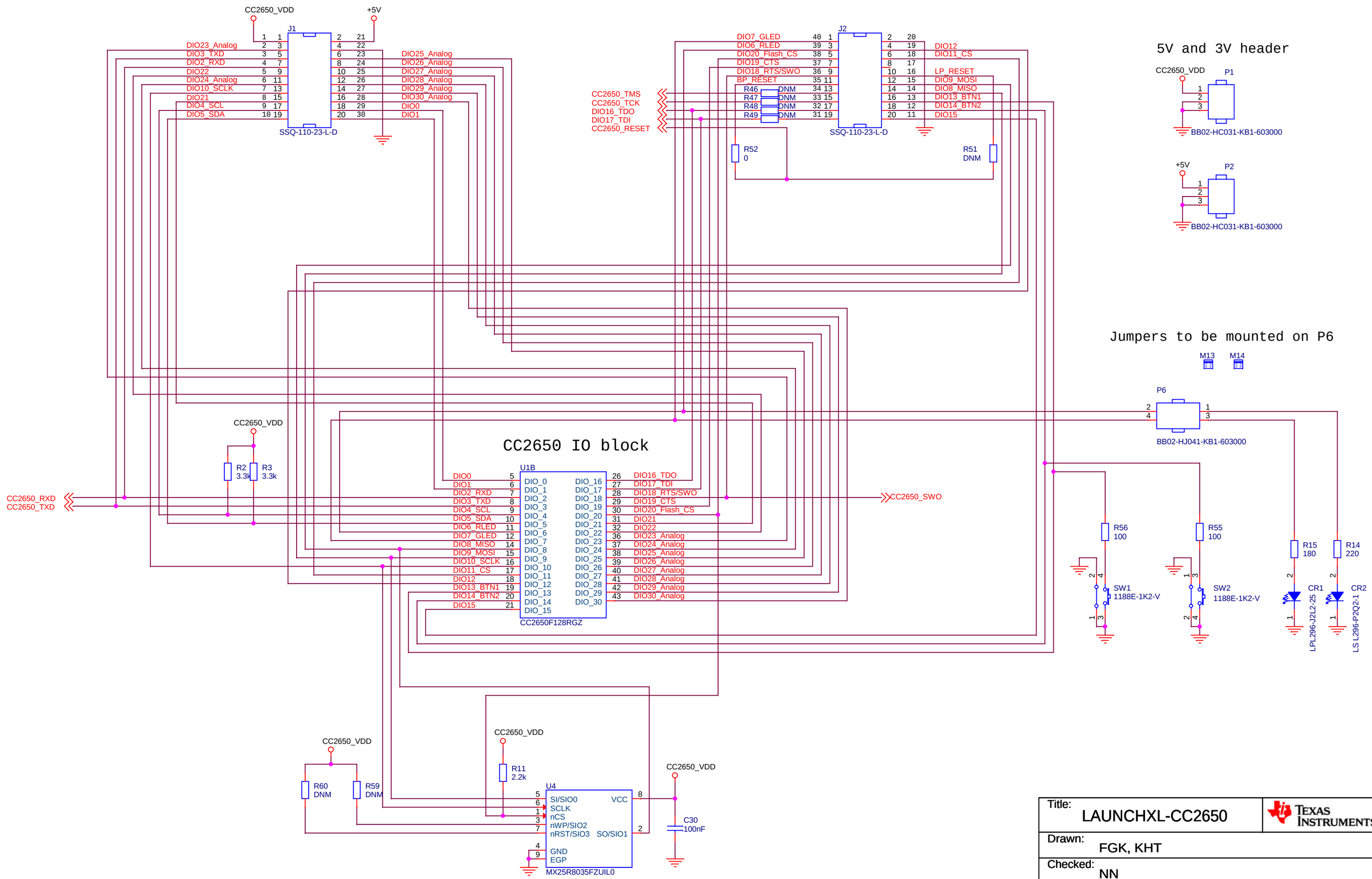

Title:	LAUNCHXL-CC2650
Drawn:	FGK, KHT
Checked:	NN
Size: A3	Rev: 1.3.0
Sheet:	2 of 5
Date:	Monday, June 06, 2016

Texas Instruments

XDS110 Debugger Interface

P10 selects the voltage source for the level shifters
When powering CC2650 from the XDS supply, connect jumper between pins 1 and 2.
When powering CC2650 from the external supply, connect jumper between pins 2 and 3.

M12 jumper to be mounted between pin 1 and 2 on header P10

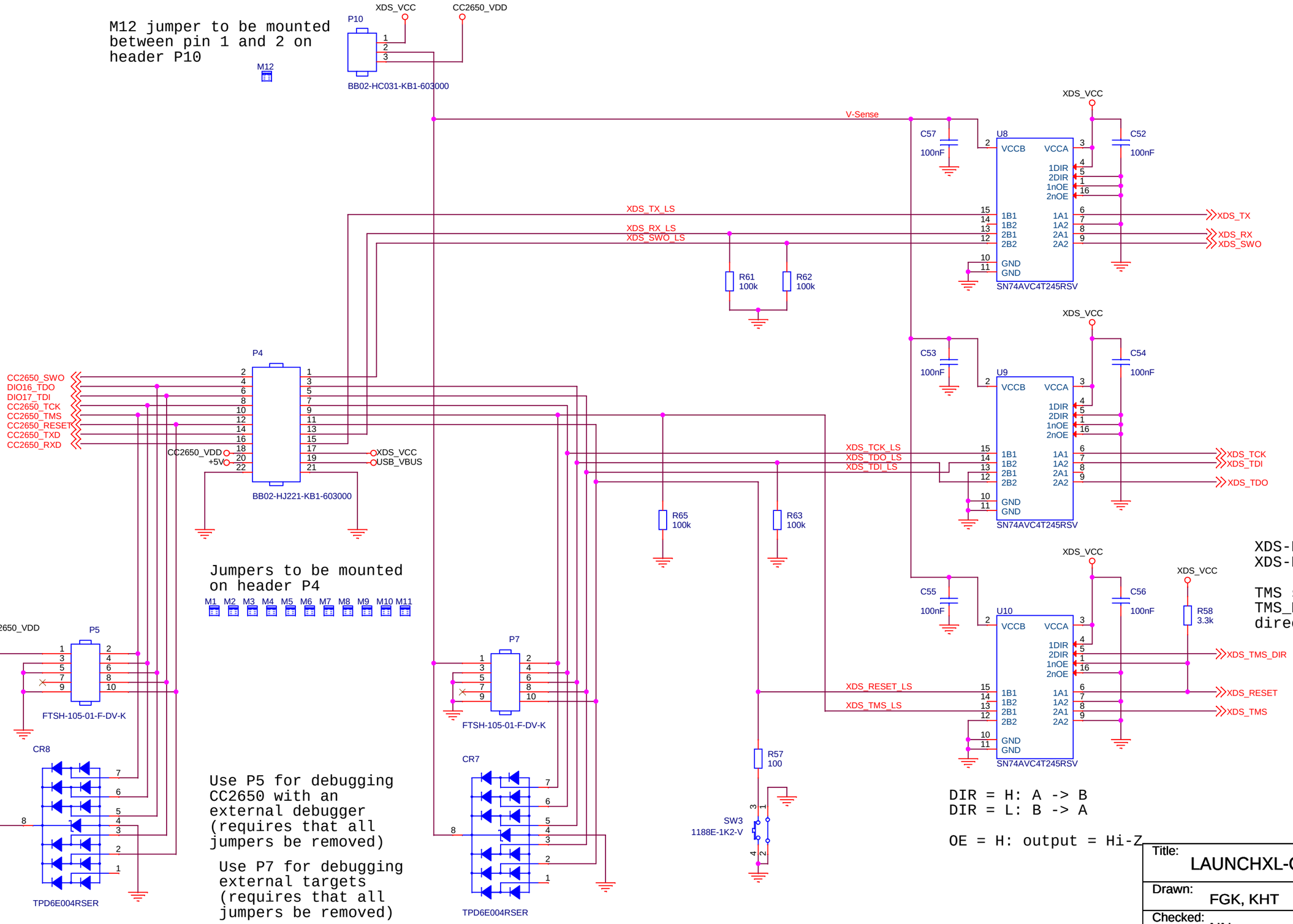

XDS-RST = 0 -> output = 0
XDS-RST = 1 -> output = Hi-Z

TMS signal is bidirectional.
TMS_DIR used to control direction of level shifter

DIR = H: A -> B
DIR = L: B -> A

OE = H: output = Hi-Z

Use P5 for debugging CC2650 with an external debugger (requires that all jumpers be removed)

Use P7 for debugging external targets (requires that all jumpers be removed)

Title:	LAUNCHXL-CC2650
Drawn:	FGK, KHT
Checked:	NN
Size: A3	Rev: 1.3.0
Sheet:	3 of 5
Date:	Monday, June 06, 2016

XDS110 Debugger

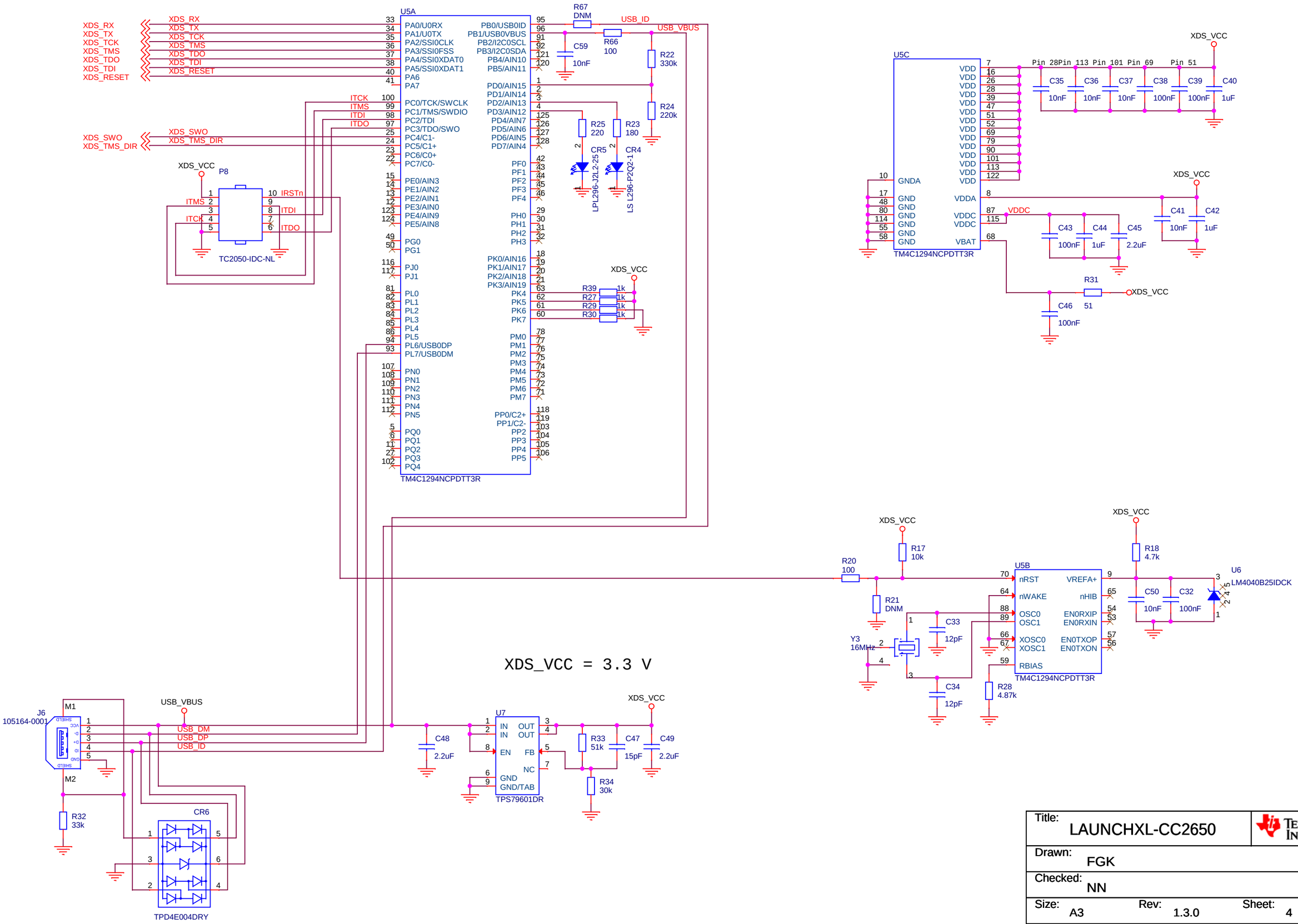

Title:	LAUNCHXL-CC2650
Drawn:	FGK
Checked:	NN
Size: A3	Rev: 1.3.0
Sheet:	4 of 5
Date:	Monday, June 06, 2016

Mechanical

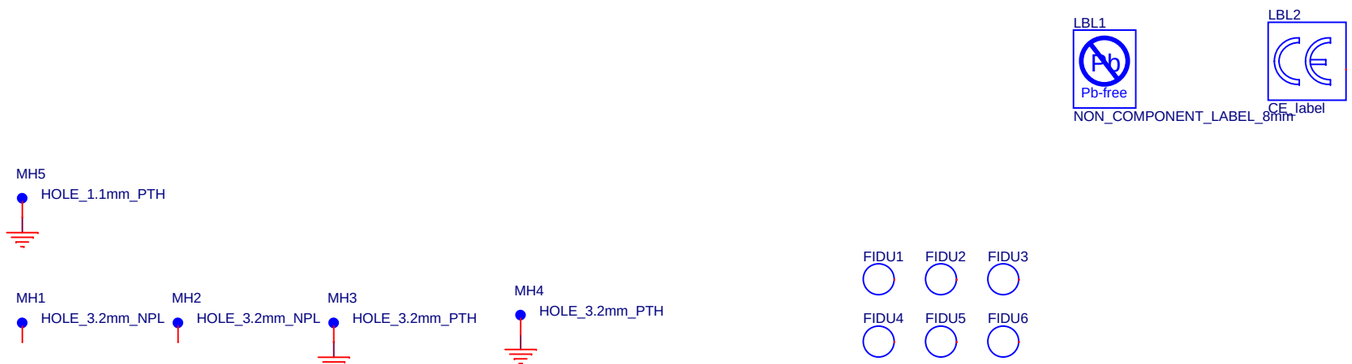

Title:	LAUNCHXL-CC2650
Drawn:	KHT
Checked:	NN
Size: A3	Rev: 1.3.0
Sheet:	5 of 5
Date:	Monday, June 06, 2016