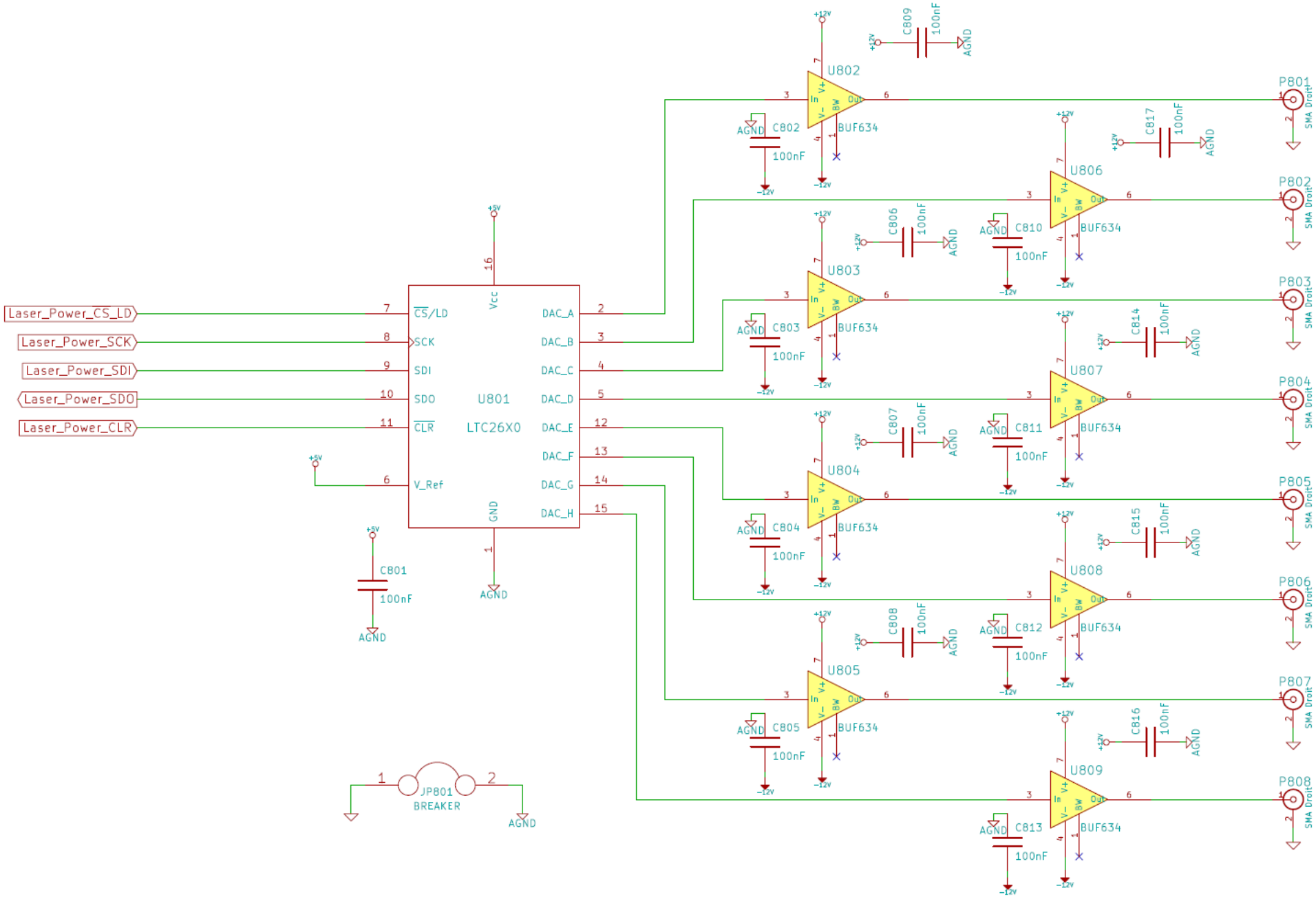
Laser_Power_CS_LD
Laser_Power_SCK
Laser_Power_SDI
Laser_Power_SDO
Laser_Power_CLR
U801
LTC26X0
CS/LD
SCK
SDI
SDO
CLR
V_Ref
Vcc
GND
DAC_A
DAC_B
DAC_C
DAC_D
DAC_E
DAC_F
DAC_G
DAC_H
+5V
C801
100nF
AGND
JP801
BREAKER
U802
U803
U804
U805
U806
U807
U808
U809
BUF634
C802
C803
C804
C805
C806
C807
C808
C809
C810
C811
C812
C813
C814
C815
C816
C817
+12V
-12V
P801
P802
P803
P804
P805
P806
P807
P808
SMA Droit