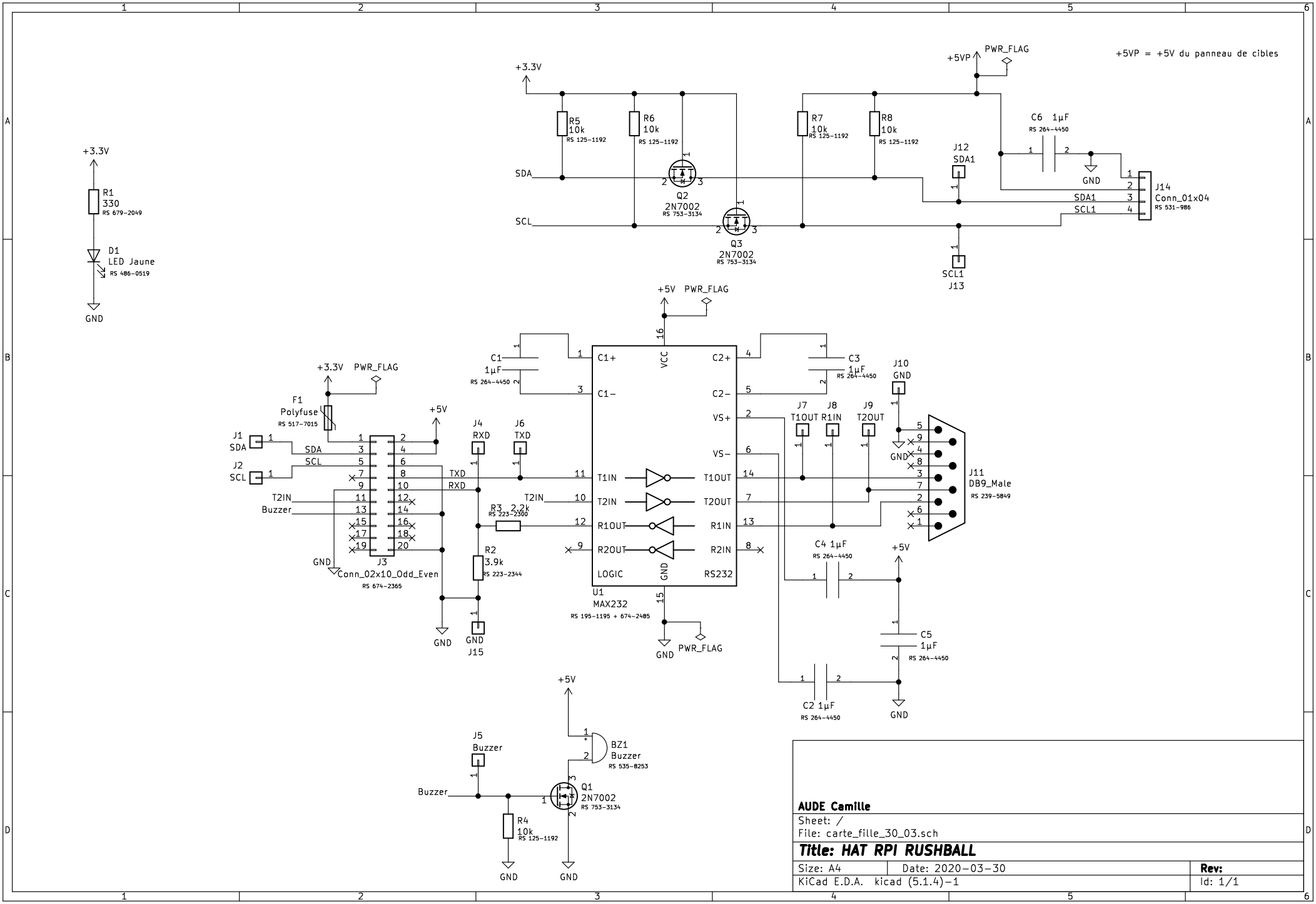
+5VP = +5V du panneau de cibles
+3.3V
R1
330
RS 679-2049
D1
LED Jaune
RS 486-0519
GND
R5
10k
RS 125-1192
R6
10k
RS 125-1192
R7
10k
RS 125-1192
R8
10k
RS 125-1192
SDA
SCL
Q2
2N7002
RS 753-3134
Q3
2N7002
RS 753-3134
+5VP
PWR_FLAG
C6 1µF
RS 264-4450
J12
SDA1
SCL1
J13
J14
Conn_01x04
RS 531-986
+5V
C1
1µF
RS 264-4450
C3
1µF
RS 264-4450
C1+
C1−
VCC
C2+
C2−
VS+
VS−
T1IN
T2IN
R1OUT
R2OUT
LOGIC
GND
T1OUT
T2OUT
R1IN
R2IN
RS232
U1
MAX232
RS 195-1195 + 674-2485
J10
GND
J7
T1OUT
J8
R1IN
J9
T2OUT
J11
DB9_Male
RS 239-5849
C4 1µF
RS 264-4450
C5
1µF
RS 264-4450
C2 1µF
RS 264-4450
F1
Polyfuse
RS 517-7015
J1
SDA
J2
SCL
J3
Conn_02x10_Odd_Even
RS 674-2365
TXD
RXD
T2IN
Buzzer
J4
RXD
J6
TXD
R3 2.2k
RS 223-2300
R2
3.9k
RS 223-2344
J15
J5
Buzzer
BZ1
Buzzer
RS 535-8253
Q1
2N7002
RS 753-3134
R4
10k
RS 125-1192
AUDE Camille
Sheet: /
File: carte_fille_30_03.sch
Title: HAT RPI RUSHBALL
Size: A4
Date: 2020-03-30
Rev:
KiCad E.D.A. kicad (5.1.4)-1
Id: 1/1