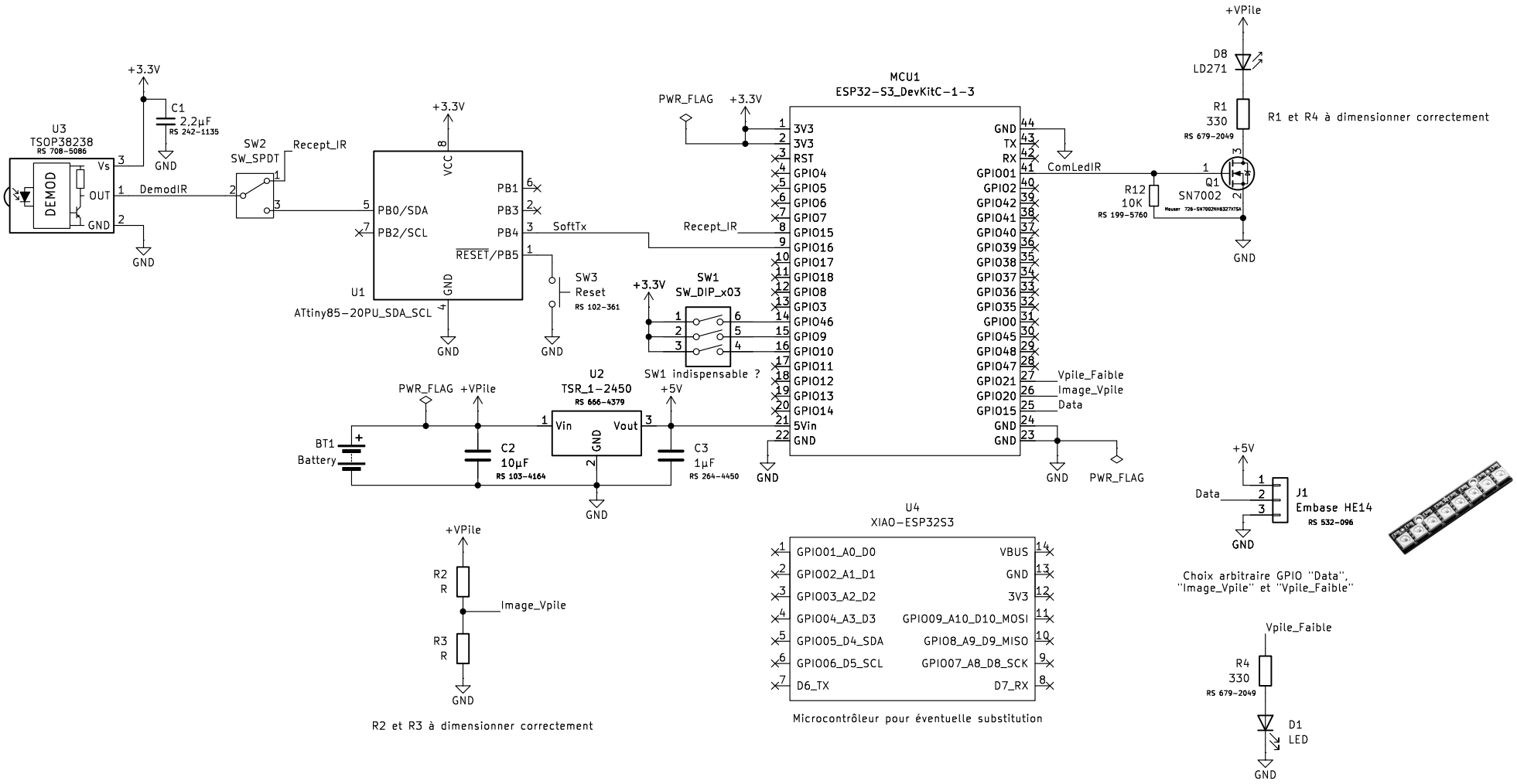

LAB

Sheet: /
File: BOM_HC.kicad_sch

Title: Projet ESTOM : BOM

Size: A4	Date: 2025-02-21	**Rev:**
KiCad E.D.A. 8.0.3		Id: 1/1