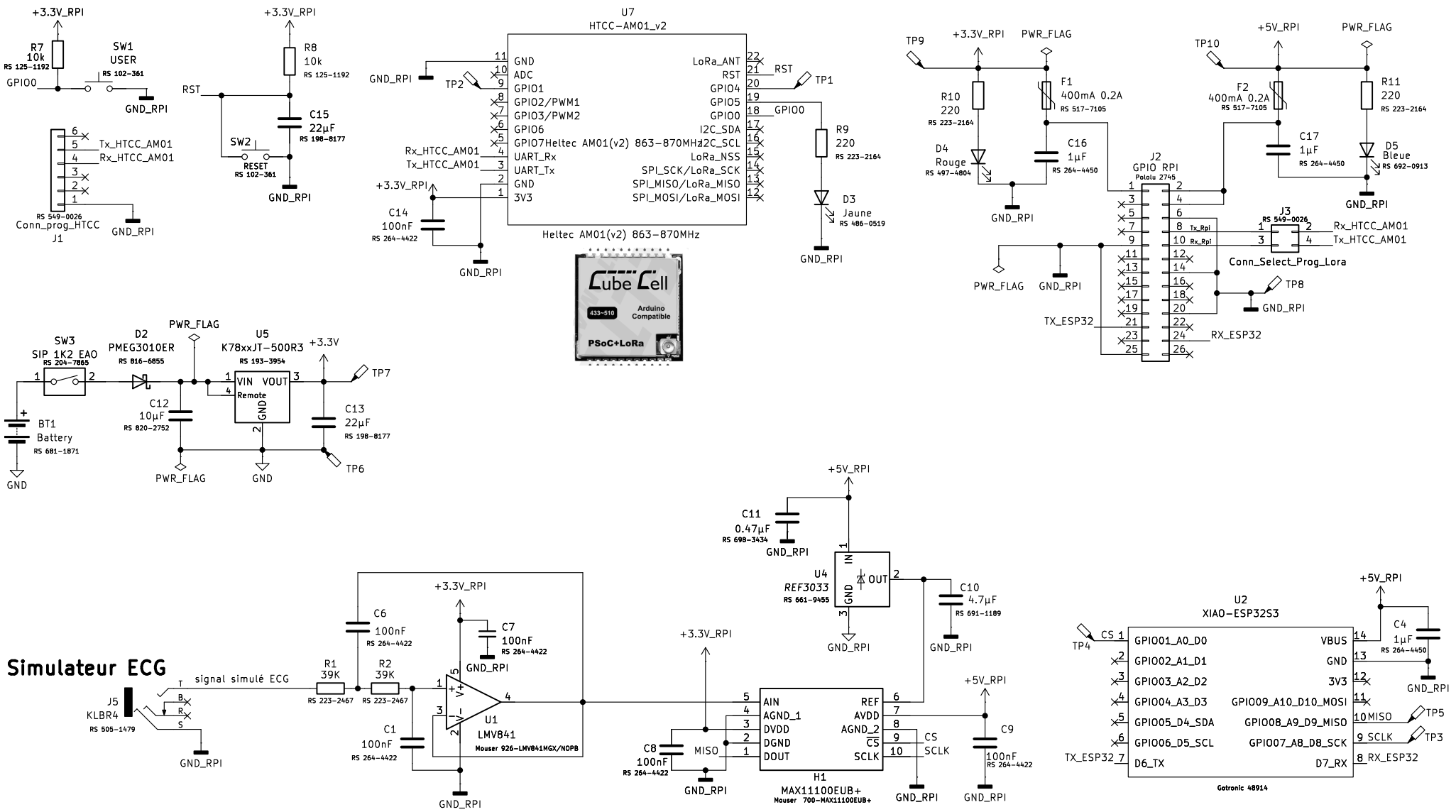

HC

Sheet: /

File: ECG_Holter_2026.kicad_sch

Title: Projet ECG Carte Holter 2026

Size: A4	Date: 2026-02-26	**Rev:**
KiCad E.D.A. 9.0.4		Id: 1/1