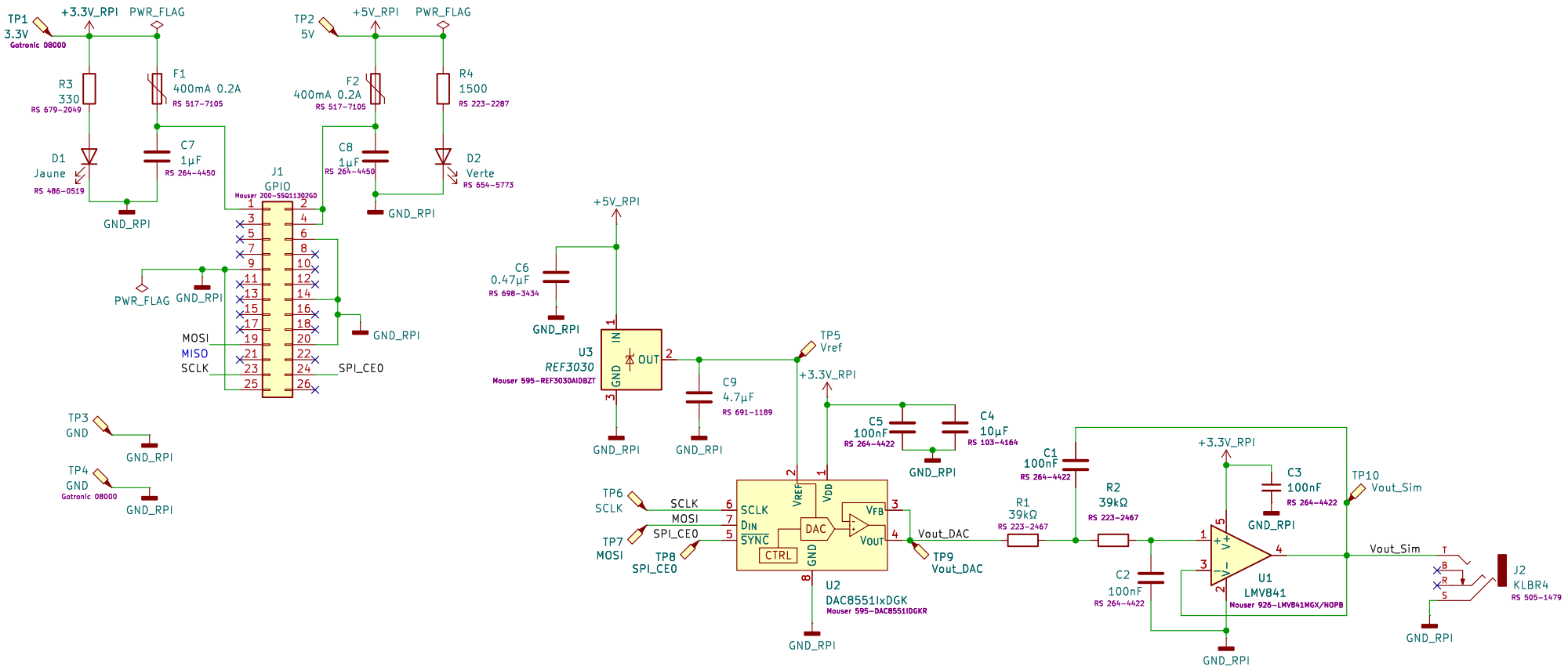

Nino Cilichini
Lycée Alphonse Benoit

Sheet: /
File: ECG_Simulateur.kicad_sch

Title: Simulateur ECG

Size: A4	Date: 2025-06-16	**Rev:**
KiCad E.D.A. 9.0.0		Id: 1/1