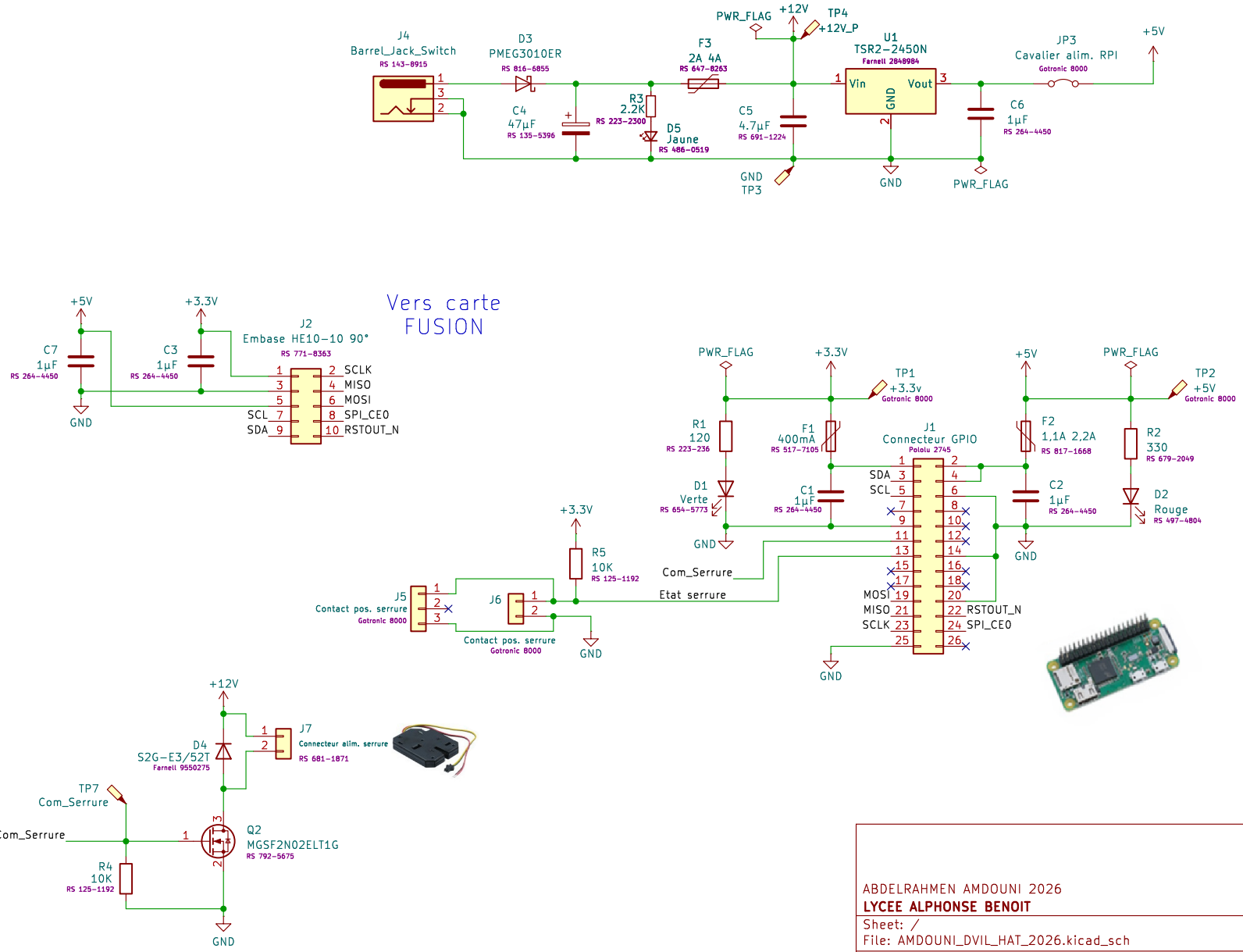

ABDELRAHMEN AMDOUNI 2026

LYCEE ALPHONSE BENOIT

Sheet: /

File: AMDOUNI_DVIL_HAT_2026.kicad_sch

Title: HAT DVIL

Size: A4	Date: 2026-04-05	**Rev:**
KiCad E.D.A. 9.0.4		Id: 1/1