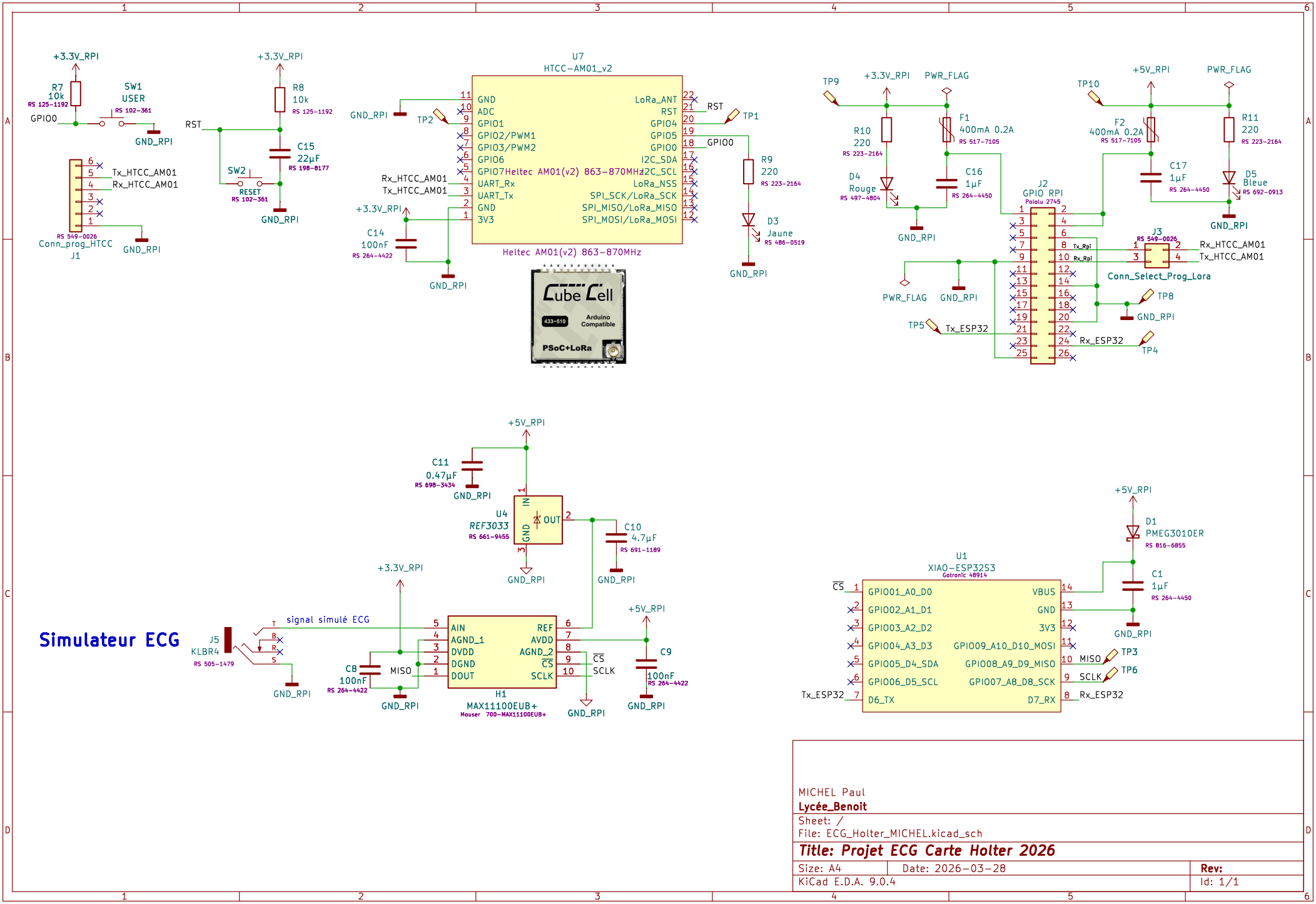

MICHEL Paul
Lycée_Benoit
Sheet: /
File: ECG_Holter_MICHEL.kicad_sch

Title: Projet ECG Carte Holter 2026

Size: A4	Date: 2026-03-28	**Rev:**
KiCad E.D.A. 9.0.4		Id: 1/1